WAELBERS

HOGE AKKERS 13 . 7961 AR RUINERWOLD . THE NETHERLANDS . T +31 (0)522 441 808 . F +31 (0)522 441 845 . INFO@WAELBERS.COM

Geachte Relatie,

Hierbij willen wij u informeren dat Metaalindustrie Waelbers BV per 15 Oktober 2009 een CE-Markering op haar producten heeft.

In enkele landen binnen de Europese Unie is de CE-Markering een vereiste om de producten te mogen verkopen.

De CE-markering is een soort productlabel (conformiteitsteken) dat aangeeft dat het product in kwestie volgens Europese specificaties is getest. Alle bouwproducten moeten op termijn van de CE-markering worden voorzien. Alleen producten met CE-markering mogen dan nog verhandeld worden.

De technische testen op onze producten zijn uitgevoerd door TNO in Delft, en heeft betrekking op de volgende product groepen:

Raveeldrager zwaar
Raveeldrager dicht
Raveeldrager univ. (2 delig)
Raveeldrager univ. dicht (2 delig)
Hoekankers met Ril

De producten zijn getest door TNO en goedgekeurd door KIWA onder de richtlijn 89/106/EEC en 93/68/EEC welke voor bouwproducten gebruikt wordt.

ETA 09/0205

De volledige CE-informatie van de drie dementionale bevestigingsplaten kan worden verkregen door de CE-website van Metaalindustrie Waelbers BV te raadplegen. Hiervoor gaat u naar: www.waelbers.com

Mocht u meer informatie wensen dan staat het Waelbers team uw graag te woord.

Met vriendelijke groet,

Roderick Waelbers
General Manager

Certificate

kiwa
Partner for progress

Number	0620-CPD-45408/01	Replaces	-
Issued	2009-10-15	First edition	-
Valid until	2014-10-15	Scope	ETAG 015 ETA-09/0205

EC-Certificate of

FACTORY PRODUCTION CONTROL

AoC-level 2+

Notified Body 0620, Kiwa Certification has determined that

Metaalindustrie Waelbers B.V.

Fulfils all provisions concerning the attestation of factory production control described in ETA-09/0205.

Product:

- As stated in this EC Certificate of Conformity

Task Waelbers B.V.	Task Kiwa Certification
Initial Type Testing	Initial inspection of FPC
Factory Production Control	Certification of FPC
Further type testing	Surveillance of FPC

Bouke Meekma
Director Kiwa N.V.

This certificate consists of 2 pages.
Publication of the certificate is allowed.

Kiwa N.V.
Sir W. Churchill-laan 273
Postbus 70
2280 AB RIJSWIJK
The Netherlands

Tel. +31 70 414 44 00
Fax +31 70 414 44 20
E-mail info@kiwa.nl
www.kiwa.nl

Producer
Metaalindustrie Waelbers B.V.
Hoge Akkers 13
7961 AR RUINERWOLD
T 0522-441808
F 0522-441845
E info@waelbers.com
I www.waelbers.com

Factory/Production site
Metaalindustrie Waelbers B.V.
Hoge Akkers 13
7961 AR RUINERWOLD

FPC CERTIFICATE
ETAG 015

0620-CPD-45408/01

In compliance with the Directive 89/106/EEC of the Council of European Communities of 21 December 1988 on the approximation of laws, regulations and administrative provisions of the Member States relating to the construction products (Construction Products Directive - CPD), amended by the Directive 93/68/EEC of the Council of European Communities of 22 July 1993, it has been stated that the construction product

WAELBERS WOODCONNECTORS

Tee-joint-connectors: RD, RD 2d, RD 2dd and RDD
Anglebrackets: H1R and H2R

These connectors are one-piece non-welded, face-fixed parts, made of (hot dip) pre-galvanised steel DX51D+Z275. These connectors are to be used in timber to timber connections in timber structures subject to dry, internal conditions defined by the service classes 1 and 2 of EN 1995-1-1:2004.

placed on the market by

Metaalindustrie Waelbers B.V.
Hoge Akkers 13
7961 AR RUINERWOLD

and produced in the factory

Metaalindustrie Waelbers B.V.
Hoge Akkers 13
7961 AR RUINERWOLD

is submitted by the manufacturer to a factory production control and to the further testing of samples taken at the factory in accordance with a prescribed test plan and that the approved body

- 0620 Kiwa N.V. -

has performed the initial inspection of the factory and of the factory production control and performs the continuous surveillance, assessment and approval of the factory production control.
This certificate attests that all provisions concerning the attestation of factory production control described in

ETA-09/0205

were applied.

This certificate was first issued on 2009-10-15 and remains valid as long as the conditions laid down in the harmonised technical specification in reference or the manufacturing conditions in the factory or the FPC itself are not modified significantly, and latest on 2014-10-15.

CE

Page 2 of 2

kiwa Approved FPC SCANNED

Kiwa N.V.,

Sir Winston Churchilllaan 273
2288 EA Rijswijk
Postbus 70
2280 AB Rijswijk
Tel.: 070 - 414 44 00
Fax: 070 - 414 44 20
E-mail: info@kiwa.nl

Gemachtigd en aangemeld overeenkomstig artikel 10 van Richtlijn 89/106/EEG van de Raad van 21 december 1988 betreffende de onderlinge aanpassing van de wettelijke en bestuursrechtelijke bepalingen der lidstaten inzake voor de bouw bestemde producten

kiwa
Partner for progress

Lid van EOTA
Member of EOTA

European Technical Approval **ETA-09/0205**
(original version is in the English language)

Trade name	Waelbers Woodconnectors
Holder of the approval	Metaalindustrie Waelbers B.V. Hoge Akkers 13, 7961 AR, Ruinerwold The Netherlands Telephone: + 31 522 44 18 08 Mail : info@waelbers.com Internet: www.waelbers.com
Generic type and use of construction product	THREE-DIMENSIONAL NAILING PLATES
Validity from to	07-10-2009 07-10-2014
Manufacturing plant	Metaalindustrie Waelbers B.V. Hoge Akkers 13, 7961 AR, Ruinerwold The Netherlands
Report number	Kiwa K49955
This Draft European Technical Approval contains	20 pages

EOTA

Europese Organisatie voor Technische Goedkeuringen
European Organisation for Technical Approvals
Europäische Organisation für Technische Zulassungen
Organisation pour l'Agrément Technique Européen

I LEGAL BASES AND GENERAL CONDITIONS 3
II SPECIFIC CONDITIONS OF THE EUROPEAN TECHNICAL APPROVAL 4
1 Definition of products and intended use 4
2 Characteristics of the product and methods of verification 4
2.1 Mechanical resistance and stability 4
2.1.1 Strength 5
2.1.2 Stiffness 5
2.1.3 Ductility in cyclic testing 5
2.2 Safety in case of fire 5
2.2.1 Reaction to fire 5
2.2.2 Resistance to fire 5
2.3 Hygiene, health and the environment 5
2.3.1 Release of dangerous substances 5
2.4 Safety in use 5
2.5 Protection against noise 5
2.6 Energy economy and heat retention 5
2.7 Aspects of durability, serviceability and identification 5
2.7.1 Durability and serviceability 5
2.7.2 Identification of the product 5
3 Attestation and evaluation of conformity and ce marking 6
3.1 System of attestation of conformity 6
3.2 Responsibilities 6
3.2.1 Tasks for the manufacturer 6
3.2.1.1 Factory production control (FPC) 6
3.2.1.2 Testing of samples taken at the factory – Prescribed Test Plan 6
3.2.2 Tasks for the Approved Body 7
3.2.2.1 Initial inspection of the factory and of factory production control 7
3.2.2.2 Continuous surveillance 7
3.3 CE marking 7
4 Assumptions and recommendations under which the fitness of the product for the intended use was favourably assessed 8
4.1 Manufacturing 8
4.2 Installation 8
4.3 Responsibility of the manufacturer 8
4.4 Recommendations 8
4.4.1 Recommendations on packaging, transport and storage 8
4.4.2 Use, maintenance and repair 8

Annex 1: Product details and specification 9
Angel brackets: H1R ("Hoekanker met 1 ril") 9
Angel brackets: H2R ("Hoekanker met 2 rillen") 10
Standard Tee-joints: RD ("Raveeldrager") 11
Splitted Tee-joints: RD2d ("Raveeldrager 2-delig") 13
Splitted Tee-joints: RD2dd ("Raveeldrager 2-delig dicht") 14
Closed Tee-joints: RDD ("Raveeldrager Dicht") 15

Annex 2: Design strength values 16
Angel brackets: H1R ("Hoekanker met 1 ril"), H2R ("Hoekanker met 2 rillen") 16
Standard Tee-joints: RD ("Raveeldrager") 17
Splitted Tee-joints: RD2d ("Raveeldrager 2 delig"), RD2dd ("Raveeldrager 2 delig dicht") 19
Closed Tee-joints: RDD ("Raveeldrager Dicht") 20

HOGE AKKERS 13 . 7961 AR RUINERWOLD . THE NETHERLANDS . T +31 (0)522 441 808 . F +31 (0)522 441 845 . INFO@WAELBERS.COM

I LEGAL BASES AND GENERAL CONDITIONS

1 This European Technical Approval is issued by Kiwa N.V., in accordance with:

Council Directive 89/106/EEC of 21 December 1988 on the approximation of laws, regulations and administrative provisions of Member States relating to construction products[1], modified by the Council Directive 93/68/EEC of 22 July 1993[2];

Besluit van 7 augustus 2001, houdende vaststelling van voorschriften met betrekking tot het bouwen van bouwwerken uit het oogpunt van veiligheid, gezondheid, bruikbaarheid, energiezuinigheid en milieu (Bouwbesluit)[3], gewijzigd door Besluit van 17 april 2002, houdende wijziging van het Bouwbesluit en enige andere maatregelen van bestuur (correcties en aanvullingen van het Bouwbesluit en aanpassing van andere besluiten aan het Bouwbesluit) en de Ministeriële regeling Bouwbesluit 2003[4] , gewijzigd door Besluit van 30 oktober 2007, houdende wijziging van Bouwbesluit 2003 (wijziging met betrekking tot de CE-markeringen en kwaliteitsverklaringen)[5] .

Common Procedural Rules for Requesting, Preparing and the Granting of European technical approvals set out in the Annex of Commission Decision 94/23/EC[6].

EOTA Guideline ETAG 015 Three-dimensional Nailing Plates, September 2002 edition.

2 Kiwa N.V. is authorized to check whether the provisions of this European Technical Approval are met. Checking may take place in the manufacturing plant. Nevertheless, the responsibility for the conformity of the products to the European technical approval and for their fitness for the intended use remains with the holder of the European technical approval.

3 This European technical approval is not to be transferred to manufacturers or agents of manufacturers other than those indicated on page 1 of this European technical approval.

4 This European technical approval may be withdrawn by Kiwa N.V., in particular after information by the Commission on the basis of Article 5 (1) of Council Directive 89/106/EEC.

5 Reproduction of this European Technical Approval including transmission by electronic means shall be in full. However, partial reproduction can be made with the written consent of Kiwa N.V.. In this case partial reproduction has to be designated as such. Texts and drawings of advertising brochures shall not contradict or misuse the European Technical Approval.

6 The European Technical Approval is issued by the approval body in its official language. This version corresponds to the English version which is circulated within EOTA. Translations into other languages have to be designated as such.

---

[1] Official Journal of the European Communities N° L 40, 11.02.1989, p. 12
[2] Official Journal of the European Communities N° L 220, 30.08.1993, p. 1
[3] Staatsblad 2001: 410; Staatsblad 2002: 203,516,518 en 582
[4] Staatsblad 2002: 241; Staatsblad 2003: 101
[5] Staatsblad 2007: 439
[6] Official Journal of the European Communities N° L 17, 20.01.1994, p. 34

HOGE AKKERS 13 . 7961 AR RUINERWOLD . THE NETHERLANDS . T +31 (0)522 441 808 . F +31 (0)522 441 845 . INFO@WAELBERS.COM

II SPECIFIC CONDITIONS OF THE EUROPEAN TECHNICAL APPROVAL

1 DEFINITION OF PRODUCTS AND INTENDED USE

This European Technical Approval applies to the "Waelbers woodconnectors" Tee-joint-connectors types RD, RD 2d, RD 2dd, RDD and Anglebrackets types H1R, H2R. These connectors are one-piece non-welded, face-fixed parts to be used in timber to timber connections, made of (hot dip) pre-galvanised steel DX51D +Z275.

The connectors are available in various sizes and are detailed in Annex 1.

The connectors are intended for use as a connection between timber elements, in end-grain to side grain or side-grain to side-grain connections, where requirements for mechanical resistance and stability shall be fullfilled.

The calculation methods are only allowed for a characteristic wood density of up to 420 kg/m³. The design of the connections shall be in accordance with Eurocode 5 or an equivalent Timber Code.

It is a condition that the parts are fixed with nails in all holes (full nailing). Nails are considered to be equivalent to profiled nails 4 mm with sufficient length according the calculation rules. Prescribed are the following nails: "Thibodraad ankernagels 4 x 40 tot 130; Diameter = 4,0 mm.

The zinc-coated parts are for use in timber structures subject to dry, internal conditions defined by the service classes 1 and 2 of EN 1995-1-1:2004 (Eurocode 5).

The connectors are not intended for use in seismic areas.

The provisions made in this ETA are based on an assumed intended working life of 50 years for the connectors . The indications given on the working life cannot be interpreted as a guarantee given by the producer, but are to be regarded only as a mean for choosing the right product in relation the expected reasonable working life of the works.

2 CHARACTERISTICS OF THE PRODUCT AND METHODS OF VERIFICATION

The assessment of fitness for the intended use has been made in accordance with EOTA ETAG 015: 2002 (Section Two).
The Essential Requirements laid down in EOTA ETAG 015: 2002 are:

2.1 Mechanical resistance and stability

For practical applications the following conditions have to be met:
- Ensure the header of joists is restrained against rotation.
- Install specified nails in all available holes.
- Fitting of parts should be free of wane (all < 3mm).
- The actual maximum bearing capacity of the joist is checked in relation to the part-capacity by the designer of the structure.

To determine the strength and stiffness properties of the three-dimensional nailing plates defined in section 1, the method of combining a calculation method based on the principles of the EN 1995-1-1 "Eurocode 5 Design of timber structures: General – Common rules and rules for buildings" with a limited test program is used.

HOGE AKKERS 13 . 7961 AR RUINERWOLD . THE NETHERLANDS . T +31 (0)522 441 808 . F +31 (0)522 441 845 . INFO@WAELBERS.COM

2.1.1 Strength

The characteristic strength values are given in Annex 2.

2.1.2 Stiffness

No performance has been determined in relation to the joint's stiffness properties, to be used for the analysis of the serviceability limit state.
According EN 26891, the deflecions during testing are limited to 15 mm. The ultimate load on the specimen is also limited to the value at 15 mm deflexion over the connection.

2.1.3 Ductility in cyclic testing

No performance has been determined in relation to ductility of a joint under cyclic testing. The performance of structures in seismic zones has not been assessed.

2.2 Safety in case of fire

2.2.1 Reaction to fire

The connectors and associated nails are classified as non-combustible and meet the requirements of class A1 according to EN 13501-1-2002 and EC Decision 96/603/EC, amended by EC Decision 2000/605/EC.

2.2.2 Resistance to fire

Performance in relation to fire resistance would be determined for the complete structural element with any associated finishes, therefore there are no aspects of performance relevant to this aspect of this Essential Requirement for 3-D nailing plates.

2.3 Hygiene, health and the environment

2.3.1 Release of dangerous substances

The three-dimensional nailing plates do not present any known risk in relation to ER 3 of Council Directive 89/106/EEC during normal use.

2.4 Safety in use

There are no aspects of performance relevant to this Essential Requirement for three-dimensional nailing plates.

2.5 Protection against noise

There are no aspects of performance relevant to this Essential Requirement for three-dimensional nailing plates.

2.6 Energy economy and heat retention

There are no aspects of performance relevant to this Essential Requirement for three-dimensional nailing plates.

2.7 Aspects of durability, serviceability and identification

2.7.1 Durability and serviceability

The zinc-coated parts are for use in timber structures subject to dry, internal conditions defined by the service classes 1 and 2 of EN 1995-1-1:2004 (Eurocode 5).
Under these conditions and under appropriate use and maintenance the assumed intended working life is 50 years.

2.7.2 Identification of the product

The CE marking appears on the packaging as stated in section 3.3.

HOGE AKKERS 13 . 7961 AR RUINERWOLD . THE NETHERLANDS . T +31 (0)522 441 808 . F +31 (0)522 441 845 . INFO@WAELBERS.COM

3 ATTESTATION AND EVALUATION OF CONFORMITY AND CE MARKING

3.1 System of attestation of conformity

The system of attestation of conformity for this product is System 2+ according to Commission Decision 97/638/EC.
This system is descriped in Council Directive (89/106/EEC), Annex III, 2(ii), *First possibility* and is detailed as follows:

(a) Tasks for the manufacturer

- Initial type-testing of the product
- Factory production control

(b) Tasks for the approved body

Certification of factory production control on the basis of:

- Initial inspection of factory and of factory production control
- Continuous surveillance, assessment and approval of factory production control.

3.2 Responsibilities

3.2.1 Tasks for the manufacturer

3.2.1.1 Factory production control (FPC)

The manufacturer shall continue to exercise their factory production control system. All the elements, requirements and provisions adopted by the manufacturer shall be documented in a systematic manner in the form of written policies and procedures. This factory production control system shall ensure that the product is in conformity with the European Technical Approval (ETA).
The manufacturer may only use the raw materials listed in the technical documentation of this ETA. The raw materials shall be subject to controls by the manufacturer. The control shall include the test certificates presented by suppliers (comparison with nominal values), including verification of dimensions and determination of material properties, e.g. chemical composition, mechanical properties and thickness of the zinc coating.

The results of factory production control shall be recorded and evaluated. The records shall at least include the following:

- Designation of the product, basic material and components
- Type of control or testing
- Date of manufacture of the product and date of testing of the product or basic material and components
- Result of control and testing and, if appropriate, comparison with requirements
- Signature of person responsible for factory production control

The records shall be available to the inspection body conducting the continuous surveillance.

3.2.1.2 Testing of samples taken at the factory – Prescribed Test Plan

The final products are checked visually and for dimensions. The frequency of controls and tests conducted during production and on the finished connector is laid down in the prescribed test plan agreed with KIWA N.V..

HOGE AKKERS 13 . 7961 AR RUINERWOLD . THE NETHERLANDS . T +31 (0)522 441 808 . F +31 (0)522 441 845 . INFO@WAELBERS.COM

3.2.2 Tasks for the Approved Body

The approved body shall perform the following tasks in accordance with the control plan:
- Initial inspection of factory and factory production control
- Continuous surveillance, assessment and approval of factory production control

The approved body shall retain and document the results in a written report.

3.2.2.1 Initial inspection of the factory and of factory production control

The approved body shall ascertain that, in accordance with the prescribed control plan, the factory, particularly the staff and equipment, and the factory production control, are suitable to ensure continuous and orderly manufacturing of the connectors in accordance with the specifications of this ETA.

3.2.2.2 Continuous surveillance

The approved body shall visit the factory twice a year for routine inspections. It shall be verified that the system of factory production control and the specified manufacturing processes are maintained in accordance with the control plan.
The certification body shall make the results of product certification and continuous surveillance available to KIWA N.V. upon demand.
The certification body appointed by the manufacturer shall issue an EC certificate of conformity confirming compliance of the factory production control with the provisions of this ETA.
In cases where the provisions of the ETA and its control plan are no longer fulfilled, the certification body shall withdraw the certificate of conformity and inform KIWA N.V. without delay.

3.3 CE marking

The CE marking shall be affixed to the packaging of the connectors. The CE symbol shall be accompanied by the following information:
- Identification number of the notified body
- Name/identification mark of the manufacturer
- Last two digits of the year in which the marking was affixed
- Identification of the product (by name and size)
- The number of the ETA
- The number of the EC certificate of conformity

The CE marking shall also be affixed on each connector. The CE symbol on the connector shall be accompanied by the following information:
- The number of the ETA

4 ASSUMPTIONS AND RECOMMENDATIONS UNDER WHICH THE FITNESS OF THE PRODUCT FOR THE INTENDED USE WAS FAVOURABLY ASSESSED

4.1 Manufacturing

"Waelbers woodconnectors" Tee-joint-connectors types RD, RD 2d, RD 2dd, RDD and Anglebrackets types H1R, H2R shall be manufactured in accordance with the provisions of this ETA using the manufacturing processes as identified in the inspection of the plant by the notified inspection body and laid down in the technical documentation. The ETA is issued for the product on the basis of the information provided by Waelbers B.V. at the time of the assessment and judging of KIWA N.V. of the product.
Changes to the product or the production process, which could affect the approval and consequently the validity of the CE marking on the basis of the approval, shall be notified to KIWA N.V. before the changes are introduced. KIWA N.V. will decide whether or not these changes affect the approval and consequently the validity of the CE marking on the basis of the approval, and if so whether further assessment or alterarions to the ETA shall be necessary.

4.2 Installation

The ETA is issued under the assumption that the execution of the works shall be in accordance with the manufacturer's technical literature.
The "Waelbers woodconnectors" are deemed fit for its intended use provided:

- The joints are designed in accordance with Eurocode 5 and ETAG 015
- The connectors are fixed with nails in all holes (full nailing)
- The header is restrained against rotation
- Acting forces are without big excentricities in relation to the centre of the connection
- Fitting of parts should be free of wane (all < 3 mm)
- The actual maximum bearing capacity of the connected timber members are checked in relation to the part-capacity by the designer of the structure
- The execution of the connection shall be in accordance with the approval holder's technical literature
- The angle brackets will be symmetrically applied to the timber members

4.3 Responsibility of the manufacturer

It is the responsibility of the manufacturer to ensure that the information on the specific conditions given in this ETA is given to those concerned.
The minimum information required is:

- Fastener specification
- Requirements for timber members
- Identification of the manufacturing batch

4.4 Recommendations

4.4.1 Recommendations on packaging, transport and storage

The connectors are packed in boxes bearing the information as stated in section 3.3. For conventional metallic products no recommendations are necessary for transport and storage.

4.4.2 Use, maintenance and repair

The assessment of the fitness for use is based on the asumption that no maintenance is required during the assumed intended working life.
Should repair prove necessary this is normally achieved by replacement.

HOGE AKKERS 13 . 7961 AR RUINERWOLD . THE NETHERLANDS . T +31 (0)522 441 808 . F +31 (0)522 441 845 . INFO@WAELBERS.COM

ANNEX 1: PRODUCT DETAILS AND SPECIFICATION

Angel brackets: H1R ("Hoekanker met 1 ril")

		dimensions mm			
part	Drawing	A	B	C	s
H1R 70x 70x 55x2	P0612	70,0	70,0	55,0	2,0
H1R 90x 90x 60x2,5	P0613	90,0	90,0	60,0	2,5
H1R 105x105x90x2.5	P0631	105,0	105,0	90,0	2,5
H1R 125x125x45x2,5	P0615	125,0	125,0	45,0	2,5
H1R 150x150x60x2.5	P0616	150,0	150,0	60,0	2,5

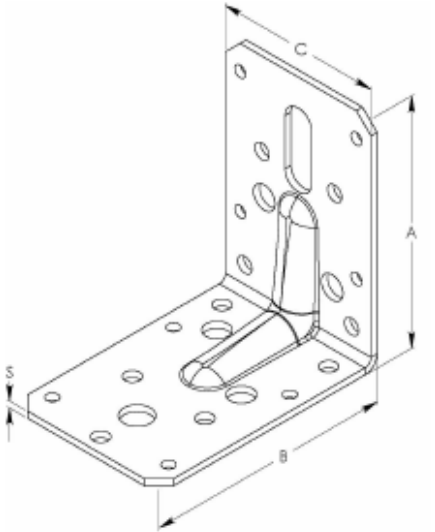

Geometric information for a typical Angle bracket with 1 rill: H1R 70x70x55x2

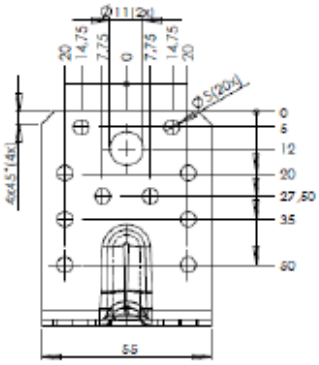

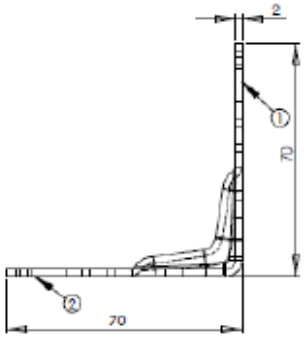

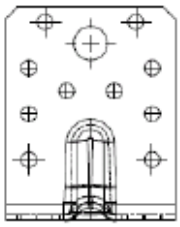

HOGE AKKERS 13 . 7961 AR RUINERWOLD . THE NETHERLANDS . T +31 (0)522 441 808 . F +31 (0)522 441 845 . INFO@WAELBERS.COM

Dimensions:	Références:
H1R 70x70x55x2	481434.11
H1R 90x90x60x2,5	4904.11
H1R 105x105x90x2,5	490444.09
H1R 125x125x45x2,5	4914.11
H1R 150x150x60x2,5	4924.11

European Technical Approval ETA-09/0205
Kiwa – K49955

Page 10 of 20

Angel brackets: H2R ("Hoekanker met 2 rillen")

		dimensions mm			
part	Drawing	A	B	C	s
H2R 80x 50x 80	P0617	80,0	50,0	80,0	2,0
H2R 80x 60x 60	P0618	80,0	60,0	60,0	2,0
H2R 100x 60x 75	P0620	100,0	60,0	75,0	2,5
H2R 120x 60x 75	P0621	120,0	60,0	75,0	2,5
H2R 140x 60x 75	P0622	140,0	60,0	75,0	2,5
H2R 160x 60x 75	P0623	160,0	60,0	75,0	2,5
H2R1s 75x48x65	P0624	75,0	48,0	65,0	1,5
H2R2s 75x48x65	P0625	75,0	48,0	65,0	1,5

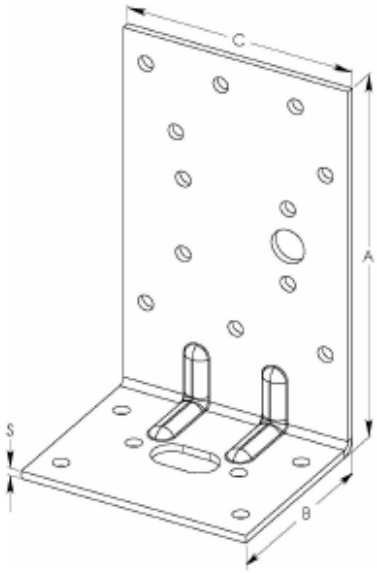

Geometric information for a typical Angle bracket with 2 rills: H2R 80x50x80

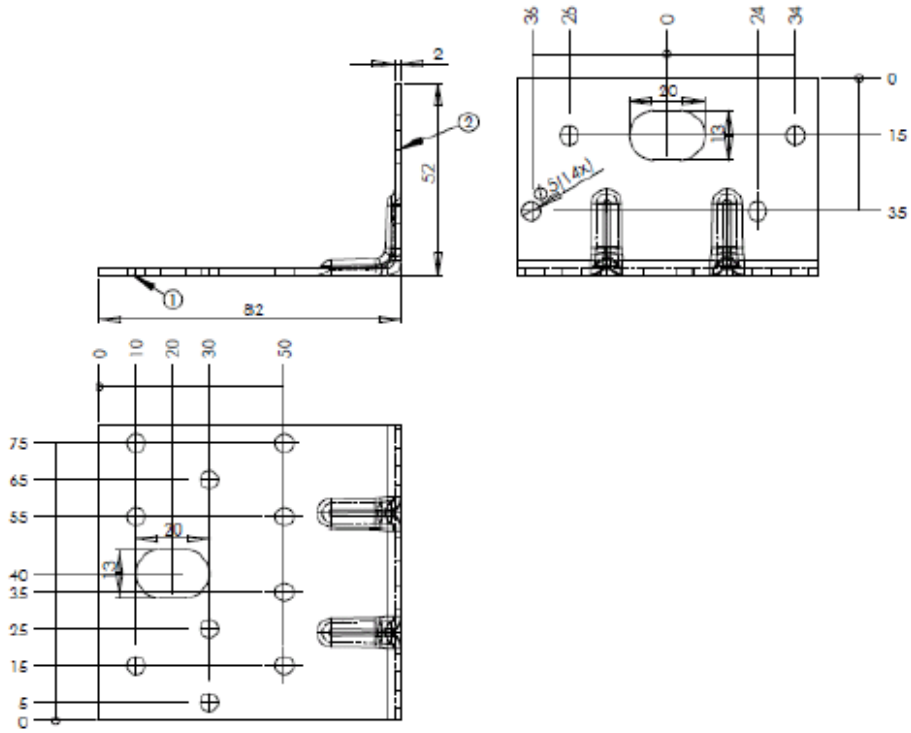

HOGE AKKERS 13 . 7961 AR RUINERWOLD . THE NETHERLANDS . T +31 (0)522 441 808 . F +31 (0)522 441 845 . INFO@WAELBERS.COM

Dimensions:	Références:
H2R 80x50x80	490024.11
H2R 80x60x60	490044.11
H2R 100x60x75	490124.11
H2R 120x60x75	490134.11
H2R 140x60x75	490144.11
H2R 160x60x75	490154.11
H2R1s 75x48	490204.24
H2R2s 75x48	490224.24

HOGE AKKERS 13 . 7961 AR RUINERWOLD . THE NETHERLANDS . T +31 (0)522 441 808 . F +31 (0)522 441 845 . INFO@WAELBERS.COM

Standard Tee-joints: RD ("Raveeldrager")

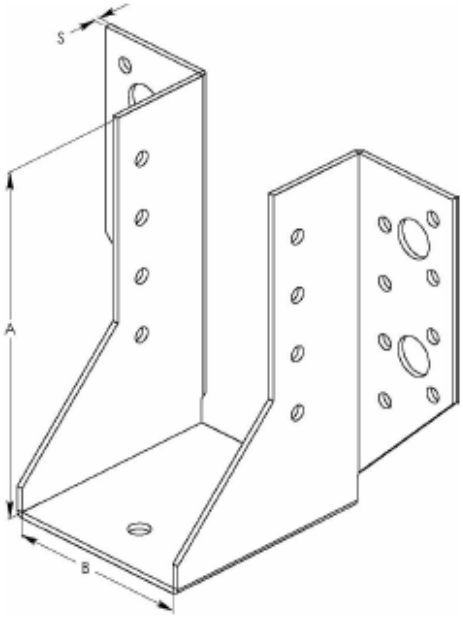

		dimensions mm			
part	Drawing	A	B	C	s
RD 210 32x 89	P0525	89,0	32,0		2,0
RD 210 38x 86	P0526	86,0	38,0		2,0
RD 210 40x 85	P0527	85,0	40,0		2,0
RD 210 46x 82	P0528	82,0	46,0		2,0
RD 210 50x 80	P0529	80,0	50,0		2,0
RD 210 59x 75,5	P0530	75,5	59,0		2,0
RD 210 63x 73,5	P0531	73,5	63,0		2,0
RD 250 32x109	P0532	109,0	32,0		2,0
RD 250 36x107	P0533	107,0	36,0		2,0
RD 250 38x106	P0534	106,0	38,0		2,0
RD 250 40x105	P0535	105,0	40,0		2,0
RD 250 46x102	P0536	102,0	46,0		2,0
RD 250 50x100	P0537	100,0	50,0		2,0
RD 250 59x 95,5	P0538	95,5	59,0		2,0
RD 250 63x 93,5	P0539	93,5	63,0		2,0
RD 250 71x 89,5	P0540	89,5	71,0		2,0
RD 250 75x 87,5	P0541	87,5	75,0		2,0
RD 300 32x134	P0542	134,0	32,0		2,0
RD 300 38x131	P0543	131,0	38,0		2,0
RD 300 40x130	P0544	130,0	40,0		2,0
RD 300 50x125	P0545	125,0	50,0		2,0
RD 300 59x120,5	P0546	120,5	59,0		2,0
RD 300 63x118,5	P0547	118,5	63,0		2,0
RD 300 71x114,5	P0548	114,5	71,0		2,0
RD 300 75x112,5	P0549	112,5	75,0		2,0
RD 300 80x110	P0550	110,0	80,0		2,0
RD 335 38x 148,5	P0551	148,5	38,0		2,0
RD 335 40x 147,5	P0552	147,5	40,0		2,0
RD 335 46x 144,5	P0553	144,5	46,0		2,0
RD 335 50x142,5	P0554	142,5	50,0		2,0
RD 335 59x 138	P0555	138,0	59,0		2,0
RD 335 63x 136	P0556	136,0	63,0		2,0
RD 335 71x 132	P0557	132,0	71,0		2,0
RD 335 75x 130	P0558	130,0	75,0		2,0
RD 335 80x 127,5	P0559	127,5	80,0		2,0
RD 380 46x167	P0560	167,0	46,0		2,0
RD 380 50x165	P0561	165,0	50,0		2,0
RD 380 59x160,5	P0562	160,5	59,0		2,0
RD 380 63x158,5	P0563	158,5	63,0		2,0
RD 380 71x154,5	P0564	154,5	71,0		2,0
RD 380 75x152,5	P0565	152,5	75,0		2,0
RD 380 80x150	P0566	150,0	80,0		2,0
RD 380 90x145	P0567	145,0	90,0		2,0
RD 380 100x140	P0568	140,0	100,0		2,0
RD 380 120x130	P0569	130,0	120,0		2,0
RD 380 140x120	P0570	120,0	140,0		2,0
RD 440 38x201	P0571	201,0	38,0		2,0
RD 440 63x188,5	P0572	188,5	63,0		2,0
RD 440 71x184,5	P0573	184,5	71,0		2,0
RD 440 75x182,5	P0574	182,5	75,0		2,0
RD 440 80x180	P0575	180,0	80,0		2,0
RD 440 90x175	P0576	175,0	90,0		2,0
RD 440 95x172,5	P0577	172,5	95,0		2,0
RD 440 100x170	P0578	170,0	100,0		2,0
RD 440 120x160	P0579	160,0	120,0		2,0
RD 500 71x 214,5	P0580	214,5	71,0		2,0
RD 500 75x 212,5	P0581	212,5	75,0		2,0
RD 500 80x 210	P0582	210,0	80,0		2,0
RD 500 90x 205	P0583	205,0	90,0		2,0
RD 500 100x 200	P0584	200,0	100,0		2,0
RD 500 120x190	P0585	190,0	120,0		2,0
RD 500 140x 180	P0586	180,0	140,0		2,0

HOGE AKKERS 13 . 7961 AR RUINERWOLD . THE NETHERLANDS . T +31 (0)522 441 808 . F +31 (0)522 441 845 . INFO@WAELBERS.COM

Dimensions:	Références:		Dimensions:	Références:	
RD 210 32x 89	846194.11	CE	RD 335 63x136	8534.11	CE
RD 210 38x 86	846124.11	CE	RD 335 71x132	8544.11	CE
RD 210 40x 85	846134.11	CE	RD 335 75x130	8554.11	CE
RD 210 46x 82	846144.11	CE	RD 335 80x127,5	8574.11	CE
RD 210 50x 80	846154.11	CE	RD 380 46x167	8604.44	CE
RD 210 59x 75,5	846164.11	CE	RD 380 50x165	8614.44	CE
RD 210 63x 73,5	846174.11	CE	RD 380 59x160,5	8624.11	CE
RD 250 32x109	846424.11	CE	RD 380 63x158,5	8634.11	CE
RD 250 36x107	846414.11	CE	RD 380 71x154,5	8644.11	CE
RD 250 38x106	846444.11	CE	RD 380 75x152,5	8654.11	CE
RD 250 40x105	846434.11	CE	RD 380 80x150	8674.11	CE
RD 250 46x102	84644404.11	CE	RD 380 90x145	8684.11	CE
RD 250 50x100	846454.11	CE	RD 380 100x140	8704.11	CE
RD 250 59x95,5	846464.11	CE	RD 380 120x130	8714.11	CE
RD 250 63x93,5	846474.11	CE	RD 380 140x120	871404.11	CE
RD 250 71x89,5	846484.11	CE	RD 440 38x201	872414.09	CE
RD 250 75x87,5	846494.11	CE	RD 440 63x188,5	8724.09	CE
RD 300 32x134	849604.11	CE	RD 440 71x184,5	8744.09	CE
RD 300 38x131	849614.11	CE	RD 440 75x182,5	8754.09	CE
RD 300 40x130	849624.11	CE	RD 440 80x180	8774.09	CE
RD 300 50x125	849634.11	CE	RD 440 90x175	877414.09	CE
RD 300 59x120,5	849644.11	CE	RD 440 95x172,5	877424.09	CE
RD 300 63x118,5	849654.11	CE	RD 440 100x170	877434.09	CE
RD 300 71x114,5	849664.11	CE	RD 440 120x160	8784.09	CE
RD 300 75x112,5	849674.11	CE	RD 500 71x214,5	8844.09	CE
RD 300 80x110	849684.11	CE	RD 500 75x212,5	8854.09	CE
RD 335 38x148,5	850044.11	CE	RD 500 80x210	8864.09	CE
RD 335 40x147,5	850054.11	CE	RD 500 90x205	8874.09	CE
RD 335 46x144,5	8504.11	CE	RD 500 100x200	8884.09	CE
RD 335 50x142,5	8514.11	CE	RD 500 120x190	888414.09	CE
RD 335 59x138	8524.11	CE	RD 500 140x180	888424.09	CE

Geometric information for a typical Standard Tee-joint: RD 500 120x190

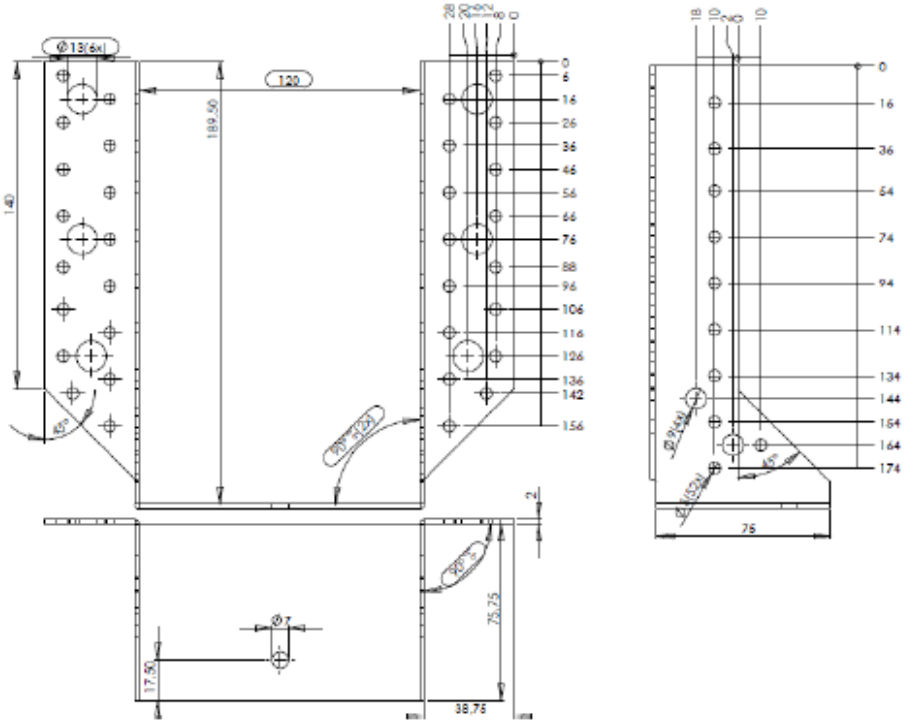

Splitted Tee-joints: RD2d ("Raveeldrager 2-delig")

RD 2d ("Raveeldrager 2 delig")

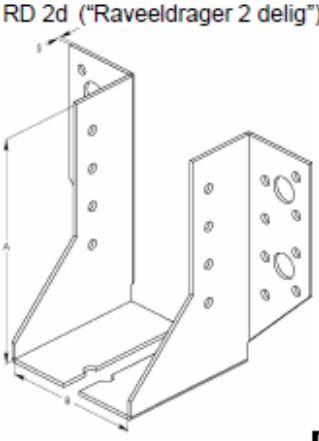

		dimensions mm			
part	Drawing	A	B	C	s
RD2d 300 63x118,5	P0605	118,5	63,0		2,0
RD2d 335 63x136	P0606	136,0	63,0		2,0
RD2d 380 75x152,5	P0607	152,5	75,0		2,0
RD2dd 300 63x118,5	P0608	118,5	63,0		2,0
RD2dd 335 63x136	P0609	136,0	63,0		2,0
RD2dd 380 75x152,5	P0610	152,5	75,0		2,0

Geometric information for a typical Tee-joint Splitted: RD2d 335 63x138,5

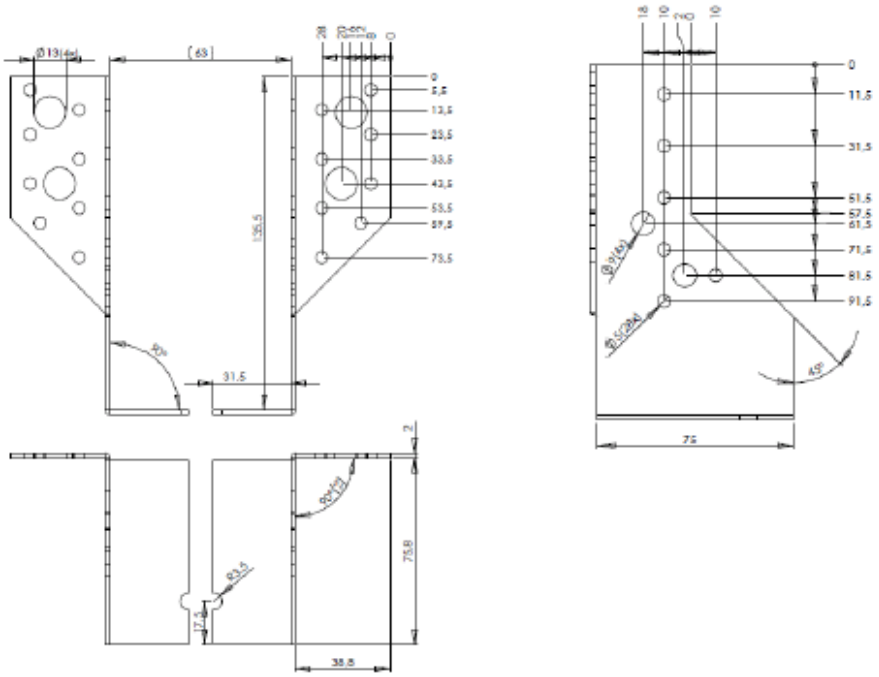

HOGE AKKERS 13 . 7961 AR RUINERWOLD . THE NETHERLANDS . T +31 (0)522 441 808 . F +31 (0)522 441 845 . INFO@WAELBERS.COM

Dimensions:	Références:
RD2d 300 63x118,5	903104.09
RD2d 335 63x136	903404.09
RD2d 380 75x152,5	903854.09
RD2dd 300 63x118,5	903124.09
RD2dd 335 63x136	903414.09
RD2dd 300 75x152,5	903874.09

Splitted Tee-joints: RD2dd ("Raveeldrager 2-delig dicht")

RD 2dd ("Raveeldrager 2 delig dicht")

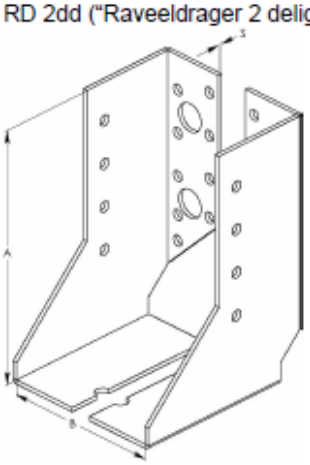

		dimensions mm			
part	Drawing	A	B	C	s
RD2d 300 63x118,5	P0605	118,5	63,0		2,0
RD2d 335 63x136	P0606	136,0	63,0		2,0
RD2d 380 75x152,5	P0607	152,5	75,0		2,0
RD2dd 300 63x118,5	P0608	118,5	63,0		2,0
RD2dd 335 63x136	P0609	136,0	63,0		2,0
RD2dd 380 75x152,5	P0610	152,5	75,0		2,0

Geometric information for a typical Tee-joint Splitted and closed: RD2dd 335 63x138,5

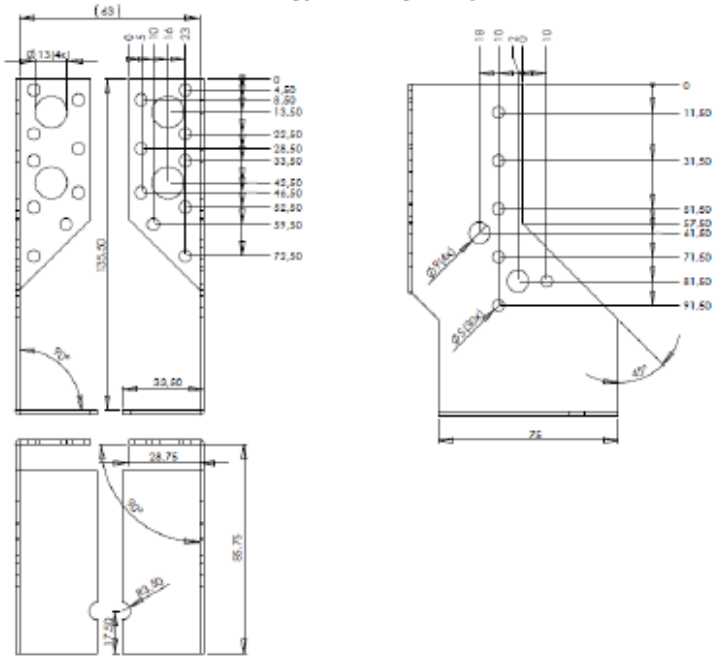

HOGE AKKERS 13 . 7961 AR RUINERWOLD . THE NETHERLANDS . T +31 (0)522 441 808 . F +31 (0)522 441 845 . INFO@WAELBERS.COM

Dimensions:	Références:
RD2d 300 63x118,5	903104.09
RD2d 335 63x136	903404.09
RD2d 380 75x152,5	903854.09
RD2dd 300 63x118,5	903124.09
RD2dd 335 63x136	903414.09
RD2dd 300 75x152,5	903874.09

European Technical Approval ETA-09/0205
Kiwa – K49955

Closed Tee-joints: RDD ("Raveeldrager Dicht")

		dimensions mm			
part	Drawing	A	B	C	s
RDD 250 63x 93,5	P0587	93,5	63,0		2,0
RDD 300 63x118,5	P0588	118,5	63,0		2,0
RDD 300 80x110	P0589	110,0	80,0		2,0
RDD 335 59x138	P0590	138,0	59,0		2,0
RDD 335 63x136	P0591	136,0	63,0		2,0
RDD 335 71x132	P0592	132,0	71,0		2,0
RDD 335 80x127,5	P0593	127,5	80,0		2,0
RDD 380 63x158,5	P0594	158,5	63,0		2,0
RDD 380 71x154,5	P0595	158,5	71,0		2,0
RDD 380 75x152,5	P0596	152,5	75,0		2,0
RDD 380 100x140	P0597	140,0	100,0		2,0
RDD 440 63x188,5	P0598	188,5	63,0		2,0
RDD 440 80x180	P0599	180,0	80,0		2,0
RDD 440 120x160	P0600	160,0	120,0		2,0
RDD 500 90x205	P0601	205,0	90,0		2,0
RDD 500 100x200	P0602	200,0	100,0		2,0
RDD 500 120x190	P0603	190,0	120,0		2,0
RDD 500 140x180	P0604	180,0	140,0		2,0

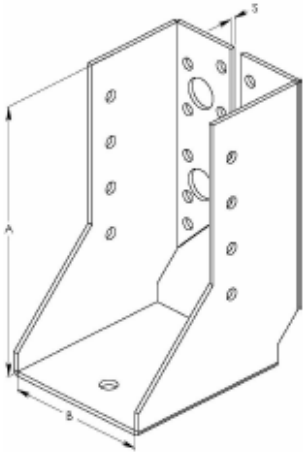

Geometric information for a typical Closed Tee-joint: RDD 500 120x190

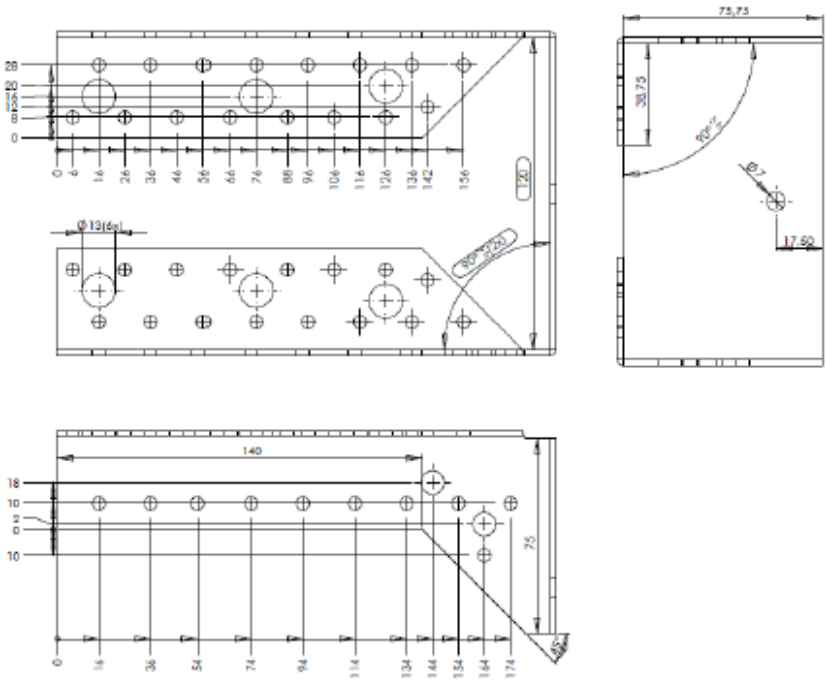

HOGE AKKERS 13 . 7961 AR RUINERWOLD . THE NETHERLANDS . T +31 (0)522 441 808 . F +31 (0)522 441 845 . INFO@WAELBERS.COM

Dimensions:	Références:	
RDD 250 63x93,5	902594.11	CE
RDD 300 63x118,5	903064.11	CE
RDD 300 80x110	903074.11	CE
RDD 335 59x138	903474.11	CE
RDD 335 63x136	903484.11	CE
RDD 335 71x132	903434.11	CE
RDD 335 80x127,5	903444.11	CE
RDD 380 63x158,5	903844.11	CE
RDD 380 71x154,5	903864.11	CE
RDD 380 75x152,5	903884.11	CE
RDD 380 100x140	903894.11	CE
RDD 440 63x188,5	904424.09	CE
RDD 440 80x180	904444.09	CE
RDD 440 120x160	904484.09	CE
RDD 500 90x205	905054.09	CE
RDD 500 100x200	905064.09	CE
RDD 500 120x190	905074.09	CE
RDD 500 140x180	905084.09	CE

ANNEX 2: CHARACTERISTIC STRENGTH VALUES

Angel brackets: H1R ("Hoekanker met 1 ril"), H2R ("Hoekanker met 2 rillen")

Angle brackets (values for a single bracket)

Attention:
Angle brackets should be used in a symmetrical way:
no additional eccentricities may be introduced due to the static system.
All values should be corrected with the density-factor (ρ-factor) of the appropriate value.
Shearforces in the main direction (direction "Dr pull" resp "Dr push") result in
- or a traction force
- or a pressure force

} of the same value on *the other* contact-area

In that cases, the minimum of the two values is the ultimate value.
The value for Lateral (Dw) is the minimum of both areas

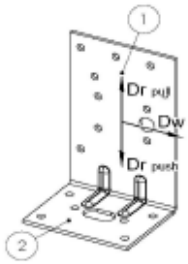

		Contact Area 1					Contact Area 2				
			char. value [kN]					char. value [kN]			
Group / drawing	part	nails	Traction *area 2*	Pull/ push (Dr)	Push *area 2*	Lateral (Dw)	nails	Traction *area 1*	Pull/ push (Dr)	Push *area 1*	Lateral (Dw)
To be corrected with ρ-factor-type			A	B	B	B		A	B	B	B
101 / P0612	H1R 70x 70x 55x2	10 x 4 mm	3,62	9,13	5,25	6,05	10 x 4 mm	3,62	9,13	5,25	6,05
102 / P0613	H1R 90x 90x 60x2,5	4 x 4 mm	1,21	3,65	7,66	2,32	4 x 4 mm	1,67	3,65	7,66	2,32
103 / P0631	H1R 105x105x90x2.5	14 x 4 mm	3,62	12,79	10,03	3,73	10 x 4 mm	3,33	9,13	10,03	3,73
104 / P0615	H1R 125x125x45x2,5	5 x 4 mm	1,81	4,57	8,06	1,88	5 x 4 mm	1,81	4,57	8,06	1,88
105 / P0616	H1R 150x150x60x2.5	10 x 4 mm	4,12	9,13	10,03	4,66	10 x 4 mm	4,12	9,13	10,03	4,66
201 / P0617	H2R 80x 50x 80	10 x 4 mm	2,42	9,13	8,18	3,73	4 x 4 mm	3,33	3,65	8,18	3,73
202 / P0618	H2R 80x 60x 60	8 x 4 mm	3,33	7,31	6,71	4,48	6 x 4 mm	2,42	5,48	6,71	4,48
204 / P0620	H2R 100x 60x 75	9 x 4 mm	2,50	8,22	7,75	4,86	6 x 4 mm	1,81	5,48	7,75	4,86
205 / P0621	H2R 120x 60x 75	12 x 4 mm	2,42	10,96	7,75	4,88	6 x 4 mm	2,50	5,48	7,75	4,88
206 / P0622	H2R 140x 60x 75	13 x 4 mm	2,50	11,87	7,75	4,88	6 x 4 mm	1,81	5,48	7,75	4,88
207 / P0623	H2R 160x 60x 75	13 x 4 mm	2,42	11,87	7,75	4,90	6 x 4 mm	2,50	5,48	7,75	4,90
208 / P0624	H2R1s 75x48	7 x 4 mm	3,33	6,39	3,84	4,85	6 x 4 mm	2,42	5,48	3,84	4,85
208 / P0625	H2R2s 75x48	7 x 4 mm	3,33	6,39	3,84	4,85	6 x 4 mm	2,42	5,48	3,84	4,85

1R = one rill 2R = two rills
1s = one big slot-hole
2s = two slotted holes

The char. density ρ_k should be taken into account bij correcting the table-values with the following ρ-factor:

e.g.: C class	*C16*	*C18*	*C20*	*C22*	*C24*	*C27*	*C30*	*C35*	*Up to*
char. wood-density [kg/m³]	310	320	330	340	350	370	380	400	420
Additional ρ-factor									
Type A	0,78	0,84	0,89	0,94	1,00	1,12	1,18	1,31	1,44
Type B	0,94	0,96	0,97	0,99	1,00	1,03	1,04	1,07	1,10

European Technical Approval ETA-09/0205
Kiwa – K49955

Page 17 of 20

Standard Tee-joints: RD ("Raveeldrager")

Standard Tee-joints			Contact Area 1		
			characteristic values in kN		
			See combination-rules		
Group / drawing	part	nails	Tract (T)	Main (Dr)	Lateral (Dw)
To be corrected with ρ-factor-type			A	B	B
1 / P0525	RD 210 32x 89	4 x 4 mm	2,42	4,64	2,32
1 / P0526	RD 210 38x 86	4 x 4 mm	2,42	4,64	2,32
1 / P0527	RD 210 40x 85	4 x 4 mm	2,42	4,64	2,32
1 / P0528	RD 210 46x 82	4 x 4 mm	2,42	4,64	2,32
1 / P0529	RD 210 50x 80	4 x 4 mm	2,42	4,64	2,32
1 / P0530	RD 210 59x 75,5	4 x 4 mm	2,42	4,64	2,32
1 / P0531	RD 210 63x 73,5	4 x 4 mm	2,42	4,64	2,32
2 / P0532	RD 250 32x109	6 x 4 mm	3,62	9,14	4,57
2 / P0533	RD 250 36x107	6 x 4 mm	3,62	9,14	4,57
2 / P0534	RD 250 38x106	6 x 4 mm	3,62	9,14	4,57
2 / P0535	RD 250 40x105	6 x 4 mm	3,62	9,14	4,57
2 / P0536	RD 250 46x102	6 x 4 mm	3,62	9,14	4,57
2 / P0537	RD 250 50x100	6 x 4 mm	3,62	9,14	4,57
2 / P0538	RD 250 59x 95,5	6 x 4 mm	3,62	9,14	4,57
2 / P0539	RD 250 63x 93,5	6 x 4 mm	3,62	9,14	4,57
2 / P0540	RD 250 71x 89,5	6 x 4 mm	3,62	9,14	4,57
2 / P0541	RD 250 75x 87,5	6 x 4 mm	3,62	9,14	4,57
3 / P0542	RD 300 32x134	8 x 4 mm	4,83	13,46	6,73
3 / P0543	RD 300 38x131	8 x 4 mm	4,83	13,46	6,73
3 / P0544	RD 300 40x130	8 x 4 mm	4,83	13,46	6,73
3 / P0545	RD 300 50x125	8 x 4 mm	4,83	13,46	6,73
3 / P0546	RD 300 59x120,5	8 x 4 mm	4,83	13,46	6,73
3 / P0547	RD 300 63x118,5	8 x 4 mm	4,83	13,46	6,73
3 / P0548	RD 300 71x114,5	8 x 4 mm	4,83	13,46	6,73
3 / P0549	RD 300 75x112,5	8 x 4 mm	4,83	13,46	6,73
3 / P0550	RD 300 80x110	8 x 4 mm	4,83	13,46	6,73
4 / P0551	RD 335 38x 151	8 x 4 mm	4,83	13,19	6,59
4 / P0552	RD 335 40x 150	8 x 4 mm	4,83	13,19	6,59
4 / P0553	RD 335 46x 147	8 x 4 mm	4,83	13,19	6,59
4 / P0554	RD 335 50x145	8 x 4 mm	4,83	13,19	6,59
4 / P0555	RD 335 59x 140,5	8 x 4 mm	4,83	13,19	6,59
4 / P0556	RD 335 63x 138,5	8 x 4 mm	4,83	13,19	6,59
4 / P0557	RD 335 71x 134,5	8 x 4 mm	4,83	13,19	6,59

The char. density ρ_k should be taken into account bij correcting the table-values with the following ρ-factor:

e.g.: C class	C16	C18	C20	C22	C24	C27	C30	C35	Up to
char. wood-density [kg/m³]	310	320	330	340	350	370	380	400	420
Additional ρ-factor									
Type A	0,78	0,84	0,89	0,94	1,00	1,12	1,18	1,31	1,44
Type B	0,94	0,96	0,97	0,99	1,00	1,03	1,04	1,07	1,10

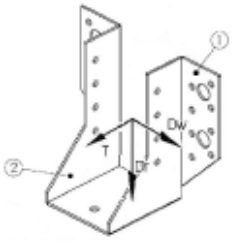

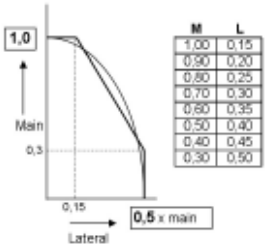

M	L
1,00	0,15
0,90	0,20
0,80	0,25
0,70	0,30
0,60	0,35
0,50	0,40
0,40	0,45
0,30	0,50

Combination of the ultimate "main" and "lateral" component

If the "traction"-component is > 30% of the ultimate value, "main" and "lateral" shall be deminished to 50% of the combination-table-value

Standard Tee-joints: RD ("Raveeldrager")

Standard Tee-joints (continued)			Contact Area 1		
			characteristic values in kN		
			See combination-rules		
Group / drawing	part	nails	Tract (T)	Main (Dr)	Lateral (Dw)
To be corrected with ρ-factor-type			A	B	B
4 / P0558	RD 335 75x 132,5	8 x 4 mm	4,83	13,19	6,59
4 / P0559	RD 335 80x 130	8 x 4 mm	4,83	13,19	6,59
5 / P0560	RD 380 46x167	10 x 4 mm	6,04	17,19	8,60
5 / P0561	RD 380 50x165	10 x 4 mm	6,04	17,19	8,60
5 / P0562	RD 380 59x160,5	10 x 4 mm	6,04	17,19	8,60
5 / P0563	RD 380 63x158,5	10 x 4 mm	6,04	17,19	8,60
5 / P0564	RD 380 71x154,5	10 x 4 mm	6,04	17,19	8,60
5 / P0565	RD 380 75x152,5	10 x 4 mm	6,04	17,19	8,60
5 P0566	RD 380 80x150	10 x 4 mm	6,04	17,19	8,60
5 / P0567	RD 380 90x145	10 x 4 mm	6,04	17,19	8,60
5 / P0568	RD 380 100x140	10 x 4 mm	6,04	17,19	8,60
5 / P0569	RD 380 120x130	10 x 4 mm	6,04	17,19	8,60
5 / P0570	RD 380 140x120	10 x 4 mm	6,04	17,19	8,60
6 / P0571	RD 440 38x201	13 x 4 mm	8,46	22,95	11,46
6 / P0572	RD 440 63x188,5	13 x 4 mm	8,46	22,95	11,46
6 / P0573	RD 440 71x184,5	13 x 4 mm	8,46	22,95	11,46
6 / P0574	RD 440 75x182,5	13 x 4 mm	8,46	22,95	11,46
6 / P0575	RD 440 80x180	13 x 4 mm	8,46	22,95	11,46
6 / P0576	RD 440 90x175	13 x 4 mm	8,46	22,95	11,46
6 / P0577	RD 440 95x172,5	13 x 4 mm	8,46	22,95	11,46
6 / P0578	RD 440 100x170	13 x 4 mm	8,46	22,95	11,46
6 / P0579	RD 440 120x160	13 x 4 mm	8,46	22,95	11,46
7 / P0580	RD 500 71x 214,5	16 x 4 mm	9,66	27,40	13,70
7 / P0581	RD 500 75x 212,5	16 x 4 mm	9,66	27,40	13,70
7 / P0582	RD 500 80x 210	16 x 4 mm	9,66	27,40	13,70
7 / P0583	RD 500 90x 205	16 x 4 mm	9,66	27,40	13,70
7 / P0584	RD 500 100x 200	16 x 4 mm	9,66	27,40	13,70
7 / P0585	RD 500 120x190	16 x 4 mm	9,66	27,40	13,70
7 / P0586	RD 500 140x 180	16 x 4 mm	9,66	27,40	13,70

The char. density ρ_k should be taken into account bij correcting the table-values with the following ρ-factor:

e.g.: C class	C16	C18	C20	C22	C24	C27	C30	C36	Up to
char. wood-density [kg/m³]	310	320	330	340	350	370	380	400	420
Additional ρ-factor									
Type A	0,78	0,84	0,89	0,94	1,00	1,12	1,18	1,31	1,44
Type B	0,94	0,96	0,97	0,99	1,00	1,03	1,04	1,07	1,10

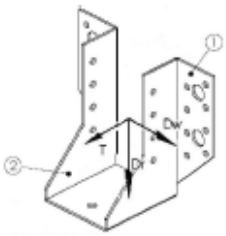

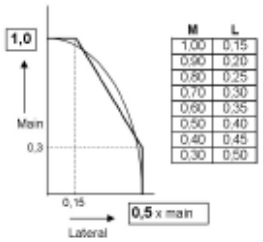

M	L
1,00	0,15
0,90	0,20
0,80	0,25
0,70	0,30
0,60	0,35
0,50	0,40
0,40	0,45
0,30	0,50

Combination of the ultimate "main" and "lateral" component

If the "traction"-component is > 30% of the ultimate value, "main" and "lateral" shall be deminished to 50% of the combination-table-value

Splitted Tee-joints: RD2d ("Raveeldrager 2 delig"), RD2dd ("Raveeldrager 2 delig dicht")

Splitted Tee-joints (set of two)

Group / drawing	part	nails	characteristic values in kN per set: Tract (T)	Main (Dr)	Lateral (Dw)	Decisive contact area
			See combination-rule			
To be corrected with ρ-factor-type			A	B	B	
3 / P0605	RD2d 300 63x118,5	8 x 4 mm	3,72	7,65	6,99	2
4 / P0606	RD2d 335 63x136	8 x 4 mm	4,83	12,43	7,95	2
5 / P0607	RD2d 380 75x152,5	10 x 4 mm	6,04	16,05	9,81	2
13 / P0608	RD2dd 300 63x118,5	9 x 4 mm	3,72	6,04	6,99	2
14 / P0609	RD2dd 335 63x136	9 x 4 mm	6,04	10,38	7,95	2
15 / P0610	RD2dd 380 75x152,5	11 x 4 mm	7,25	14,88	9,81	2

2d = splitted

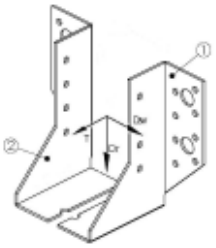

2dd = splitted and closed

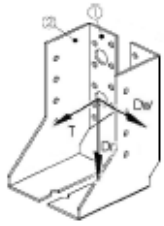

Combination-factor Main – Traction

Main	Traction
1,00	0,30
0,90	0,40
0,80	0,50
0,70	0,60
0,60	0,70
0,50	0,80
0,40	0,90
0,30	1,00

The char. density ρ_k should be taken into account by correcting the table-values with the following ρ-factor:

e.g.: C class	C16	C18	C20	C22	C24	C27	C30	C35	Up to
char. wood-density [kg/m³]	310	320	330	340	350	370	380	400	420
Additional ρ-factor									
Type A	0,78	0,84	0,89	0,94	1,00	1,12	1,18	1,31	1,44
Type B	0,94	0,96	0,97	0,99	1,00	1,03	1,04	1,07	1,10

Closed Tee-joints: RDD ("Raveeldrager Dicht")

Closed Tee-joints			Contact Area 1		
			characteristic values in kN		
			See combination-rules		
group	Part	nails	Tract (T)	main (Dr)	Lateral (Dw)
To be corrected with ρ-factor-type			A	B	B
12 / P0587	RDD 250 63x 93,5	7 x 4 mm	3,62	12,31	6,16
13 / P0588	RDD 300 63x118,5	8 x 4 mm	4,83	13,98	6,99
23 / P0589	RDD 300 80x110	9 x 4 mm	6,04	15,98	7,99
14 / P0590	RDD 335 59x138	9 x 4 mm	6,04	15,90	7,95
14 / P0591	RDD 335 63x136	9 x 4 mm	6,04	15,90	7,95
14 / P0592	RDD 335 71x132	9 x 4 mm	6,04	15,90	7,95
14 / P0593	RDD 335 80x127,5	2 x 4 mm	6,04	15,90	7,95
15 / P0594	RDD 380 63x158,5	11 x 4 mm	7,25	19,61	9,81
15 / P0595	RDD 380 71x154,5	11 x 4 mm	7,25	19,61	9,81
15 / P0596	RDD 380 75x152,5	11 x 4 mm	7,25	19,61	9,81
15 / P0597	RDD 380 100x140	11 x 4 mm	7,25	19,61	9,81
16 / P0598	RDD 440 63x188,5	15 x 4 mm	9,66	25,19	12,60
26 / P0599	RDD 440 80x180	13 x 4 mm	8,46	23,18	11,59
26 / P0600	RDD 440 120x160	13 x 4 mm	8,46	23,18	11,59
17 / P0601	RDD 500 90x205	16 x 4 mm	9,66	26,93	13,47
17 / P0602	RDD 500 100x200	16 x 4 mm	9,66	26,93	13,47
17 / P0603	RDD 500 120x190	16 x 4 mm	9,66	26,93	13,47
17 / P0604	RDD 500 140x180	16 x 4 mm	9,66	26,93	13,47

The char. density ρ_k should be taken into account by correcting the table-values with the following ρ-factor:

e.g.: C class	*C16*	*C18*	*C20*	*C22*	*C24*	*C27*	*C30*	*C35*	*Up to*
char. wood-density [kg/m³]	**310**	**320**	**330**	**340**	**350**	**370**	**380**	**400**	**420**
Additional ρ-factor									
Type A	0,78	0,84	0,89	0,94	1,00	1,12	1,18	1,31	1,44
Type B	0,94	0,96	0,97	0,99	1,00	1,03	1,04	1,07	1,10

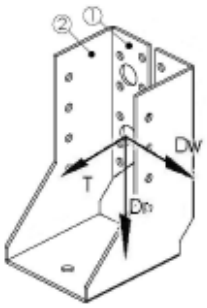

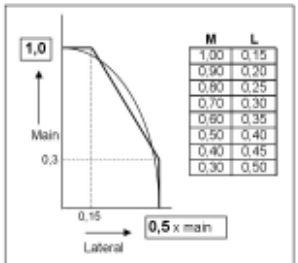

M	L
1,00	0,15
0,90	0,20
0,80	0,25
0,70	0,30
0,60	0,35
0,50	0,40
0,40	0,45
0,30	0,50

Combination of the ultimate "main" and "lateral" component

If the "traction"-component is > 30% of the ultimate value, "main" and "lateral" shall be deminished to 50% of the combination-table-value